PLEASE CONTACT OUR SALES TEAM FOR PARTS INFORMATION: sales@rvsupplies.co.nz

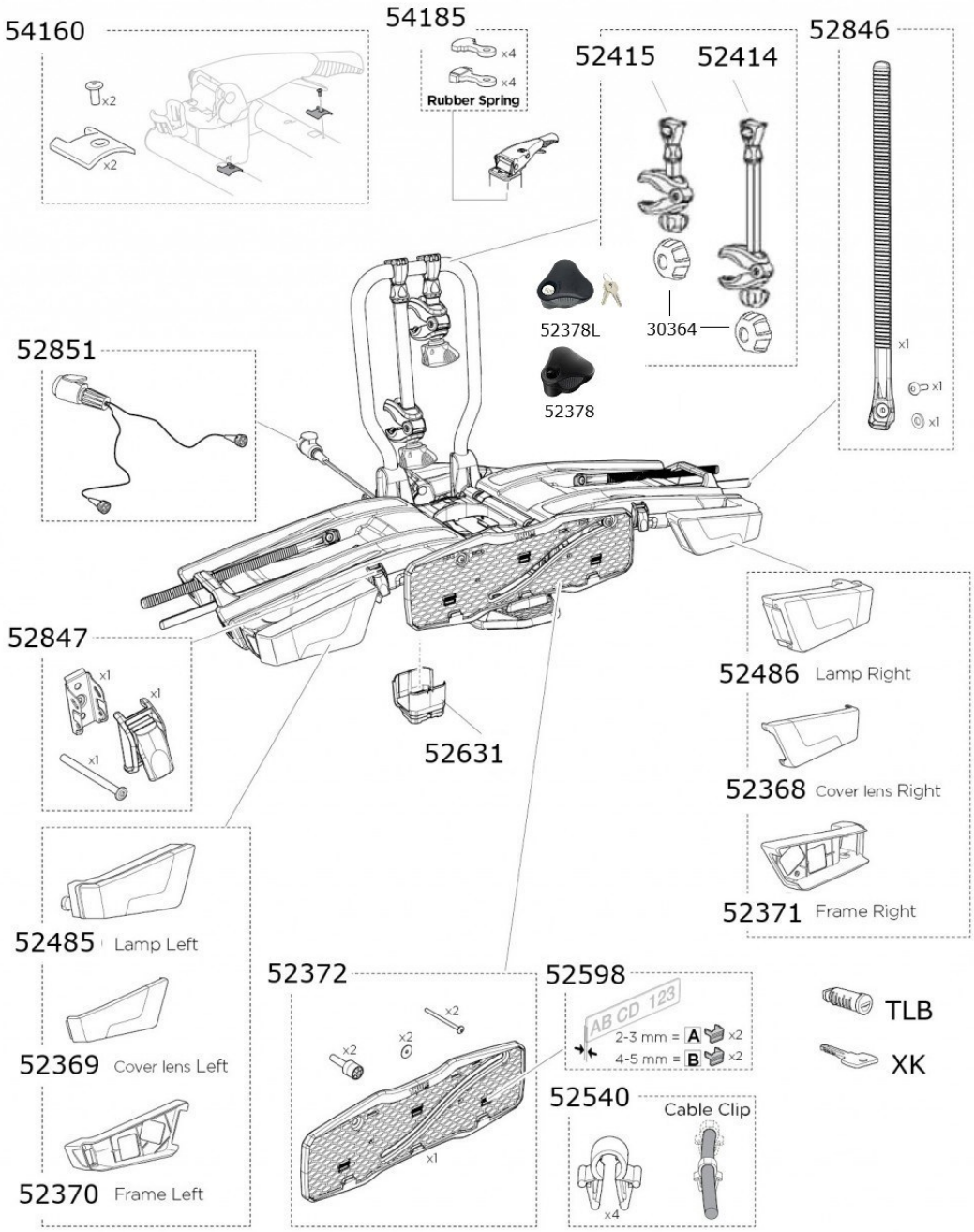

Thule Easy Fold XT Bike Rack - (RVP584)