THETFORD

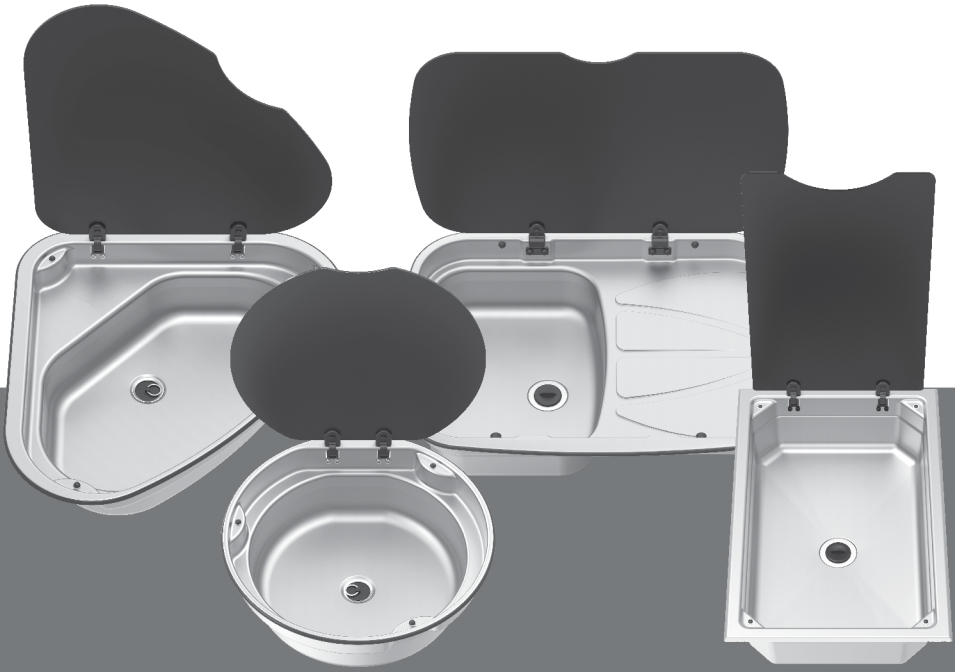

INSTALLATION MANUAL

Sinks and bowls

SBL 10, 20, 30 and SSK10 series

EN
Original Installation Manual

Contents

1 Introduction....2
2 Safety....3
3 Serviceability....3
4 Drawings and models....4
5 Before installation....4
6 Installation....11
7 After installation....18
8 Service & questions....19

1. Introduction

General

This is the installation manual for the Thetford's Sinks and Bowls. The manual is meant for competent installers who will install the appliance in a caravan, camper or holiday home.

Read the information and instructions carefully and follow them strictly to install the appliance safely and correctly.

Also read the warnings in the user manual before testing the appliance after installation.

This document is version SINS2150/0624-V03 of the installation manual.

Our policy is one of continuous development and improvement. Specifications and illustrations may change subsequent to publication.

Please visit www.thetford.com for the most recent version.

Symbols

The following symbols may be used in this manual:



Warning. Risk of serious injury and/or damage.



Caution. Risk of moderate injury and/or damage.



Attention. Important information.



Note. Additional information.



Video. Additional instruction video available.

2. Safety

General



Do not modify this appliance, unless the modification is authorised and carried out by the manufacturer or their agent.

Installation



Use only genuine and approved parts and materials.



Wear the correct Personal Protective Equipment during the installation. Also follow the applicable safety regulations.



Take care when installing enamel sinks. Although the enamel is tough and durable, it can be damaged by over-tightening the fixing screws.

3. Serviceability

The installer of Thetford products is responsible for correct installation according to the Thetford installation instructions to ensure the functionality and serviceability of the product.

In terms of serviceability, this means that a dealer or authorised Thetford service partner must be able to remove and re-install the Thetford product within the time that is allowed according to the Thetford time-list, using standard tools and equipment.

This is to claim any warranty during the warranty period after the purchase date.

In case of any queries on this subject, a Thetford local service representative can be contacted for additional support related to the installation of the product.

4. Drawings and models

Aftermarket models are supplied with templates, for easy position and placement.

Table 1: Available drawings and models

Model*	2D Cut Out Template
SBL10	STEM0006
SBL17	STEM0007
SBL22	STEM0001
SBL23	STEM0002
SBL30	STEM0003
SBL33	STEM0202
SBL34	STEM0005
SSK10	STEM0008

* Not all models are available for the Aftermarket.

5. Before installation

Content of the box

- Bowl or sink
- Seal
- Fixing system
- Template (for the aftermarket models)

If something is missing, please contact your dealer.

Main dimensions

	SBL10 series	SBL17 series	SBL33 series	SBL34 series	SSK10 series
Length x width	470 x 360mm	550 x 360mm	480 x 480mm	400 x 445mm	630 x 470mm
Depth	153mm	135mm	145mm	145mm	153mm

	SBL22 series	SBL23 series	SBL30 series
Diameter	362mm	461mm	405mm
Depth	127mm	127 or 103mm	145mm

Technical specifications

The minimum worktop thickness is 15mm.

SBL10 series

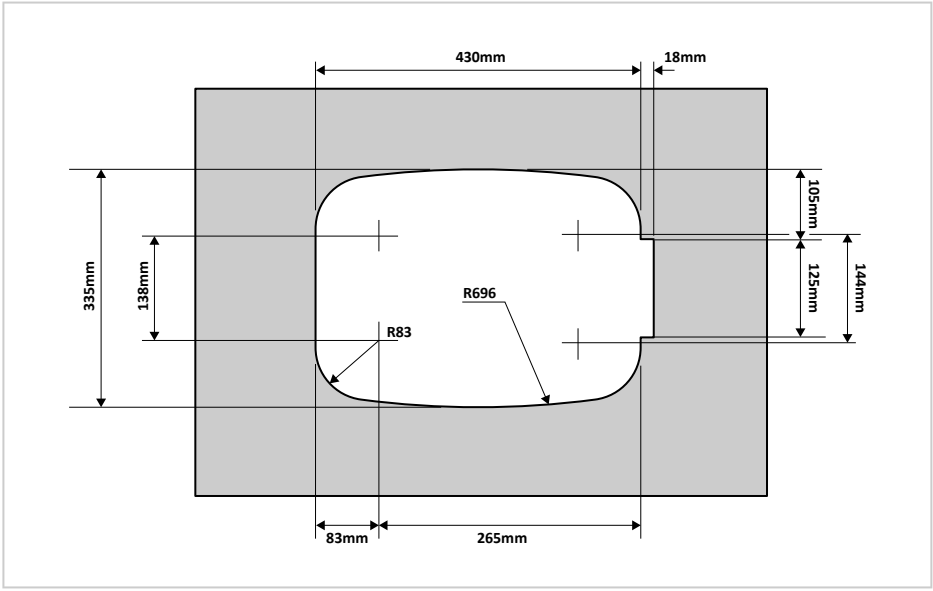

SBL17 series

SBL170 models

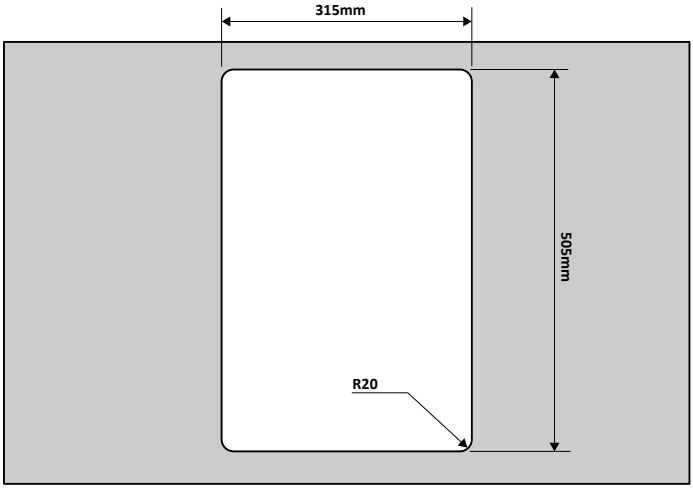

SBL172 models

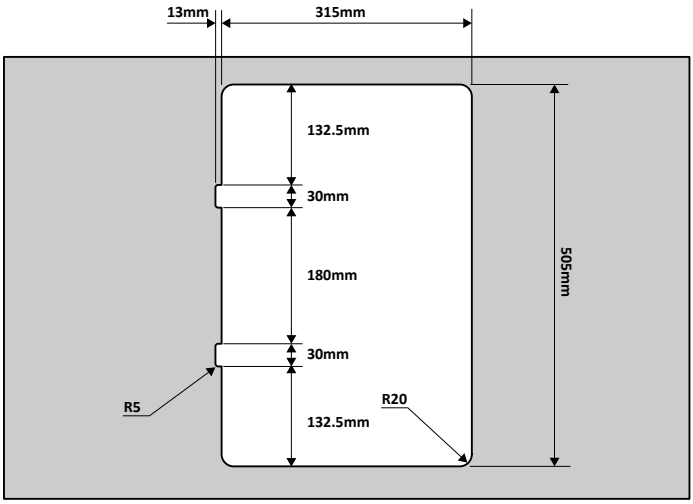

SBL22 series

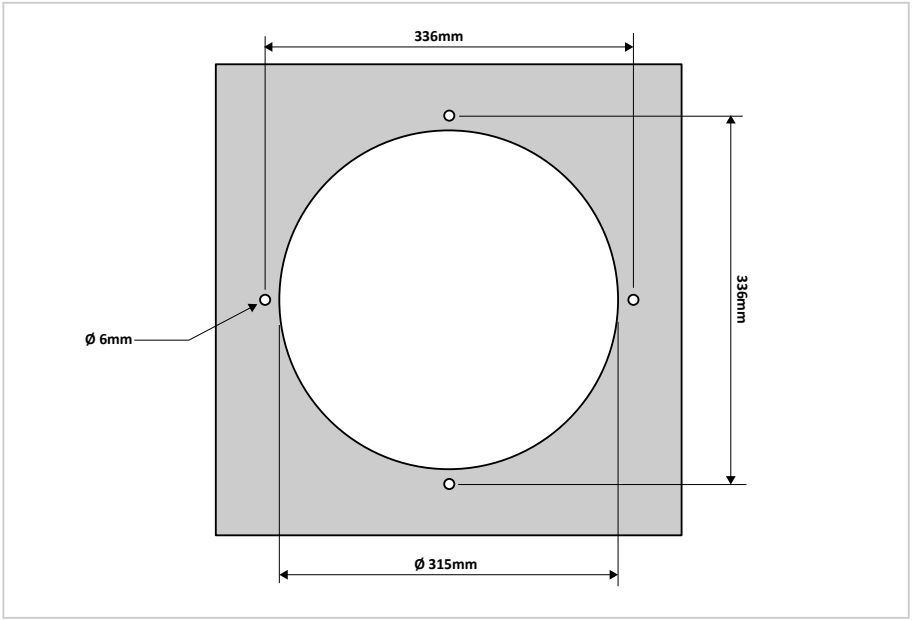

SBL23 series

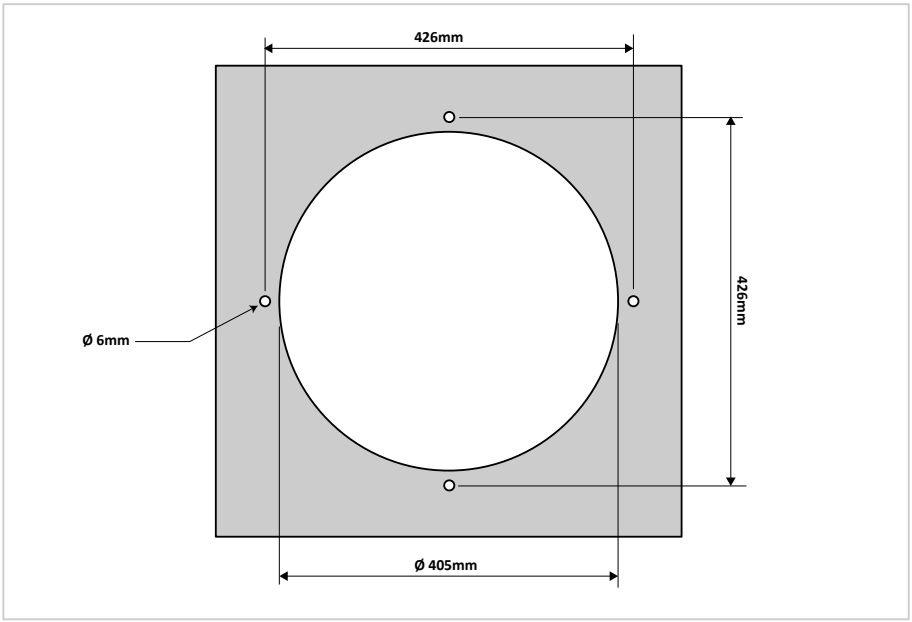

SBL30 series

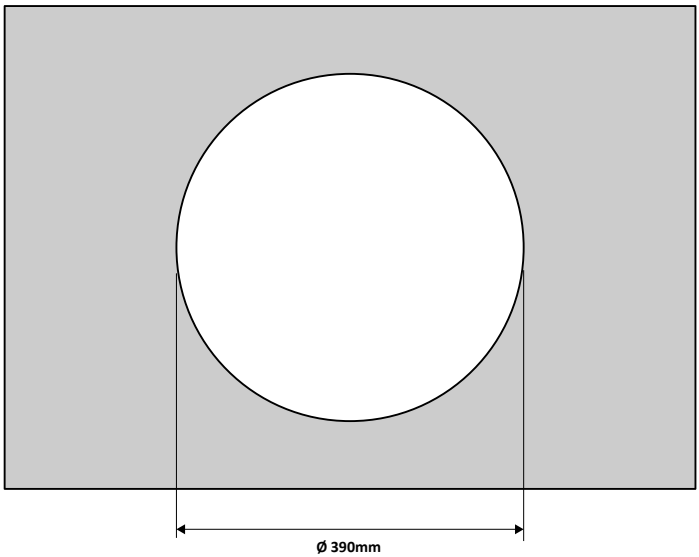

SBL33 series

The template provides two options:

- A for surface mounting.
- B for flush mounting. Flush mounting has the extra rebate, not a full cut-out for the area between A and B.

Surface mount

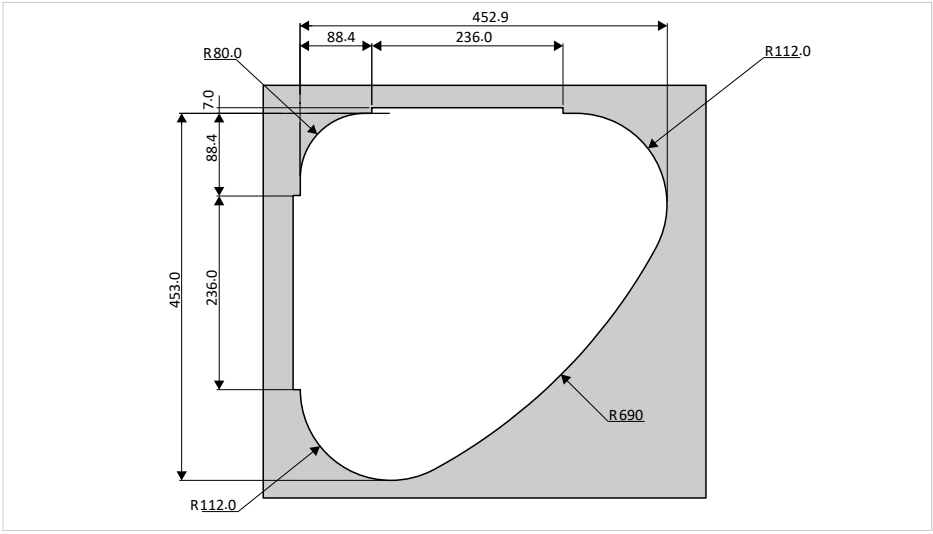

Flush mount

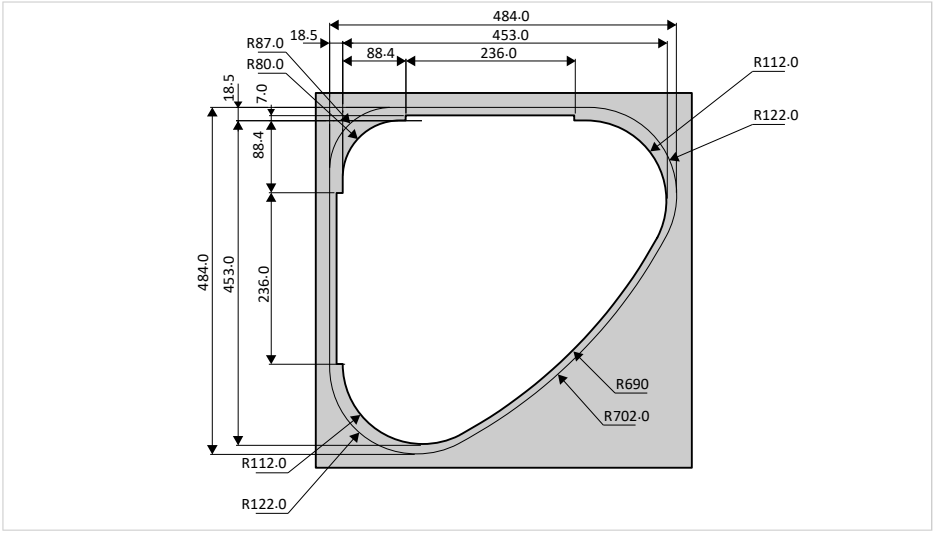

SBL34 series

The template provides two options:

- A for surface mounting.
- B for flush mounting. Flush mounting has the extra rebate, not a full cut-out for the area between A and B.

Surface mount

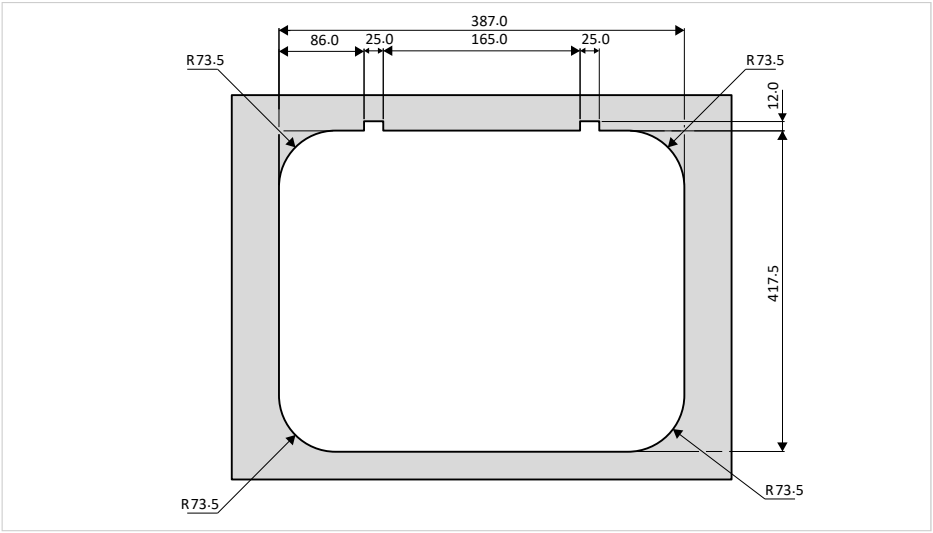

Flush mount

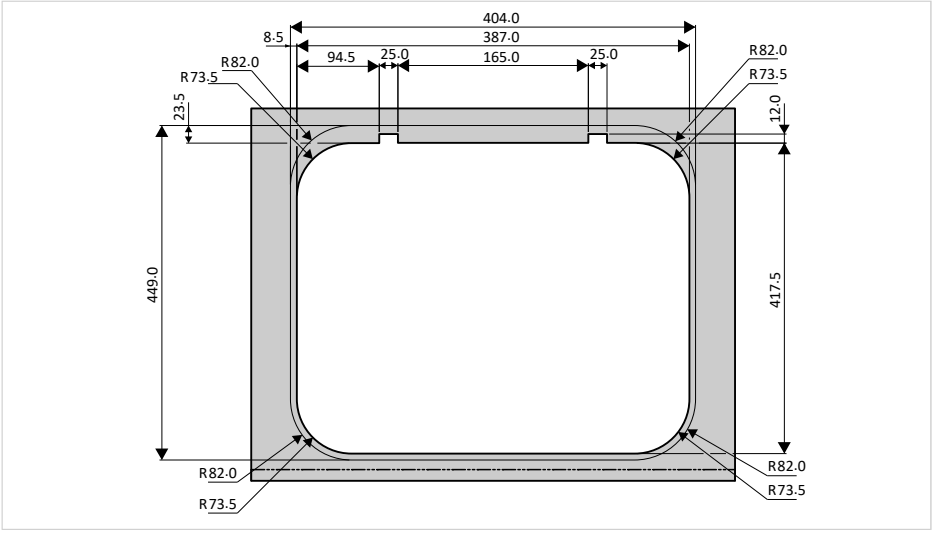

SSK10 series

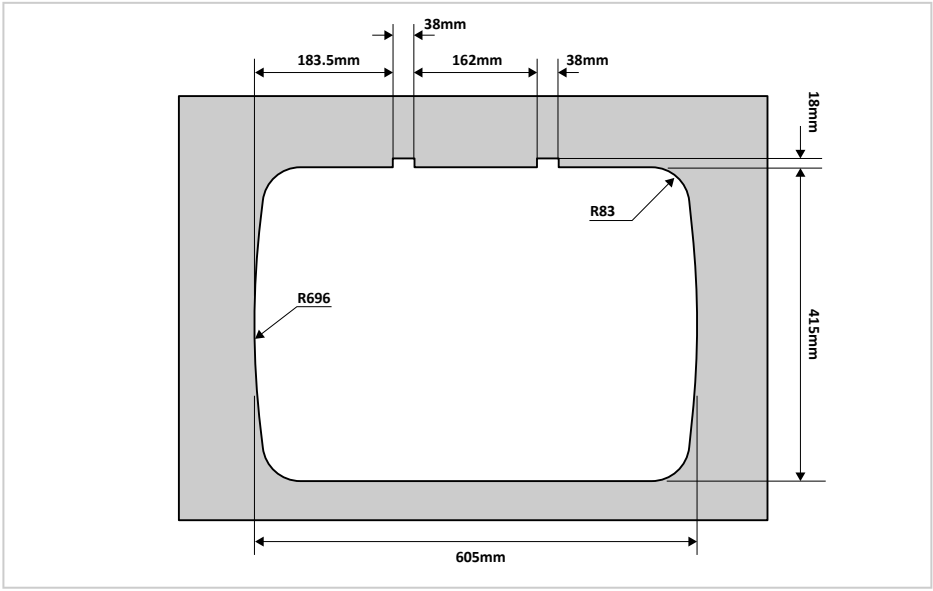

6. Installation

Read the applicable safety instructions in *Safety*.

Prepare

- Place the template on the worktop, where applicable.
- Check the dimensions. Make sure there is enough space around the appliance.
- Make the cut-out in the worktop.

Bowls and sinks fitted with a glass lid require an additional cut-out to provide clearance for the glass lid hinges.

Place

- Remove all packaging materials from the appliance. Recycle packaging where available.
- For models without self-adhesive foam seal: Fit the seal to the sink or bowl.

Ensure that the seal is seated correctly.
- Take care when handling the bowl not to damage the seal.

- Place the appliance in the worktop.

Make sure the appliance is located centrally and level in the aperture.

- Secure the appliance, to finish the installation.

Use the applicable secure instructions per model in **Secure** below.

Secure

SBL10 and SSK10 series

The sink is not completely flat on the worktop and is slightly higher at either end. This is intentional to ensure a good watertight seal once fitted.

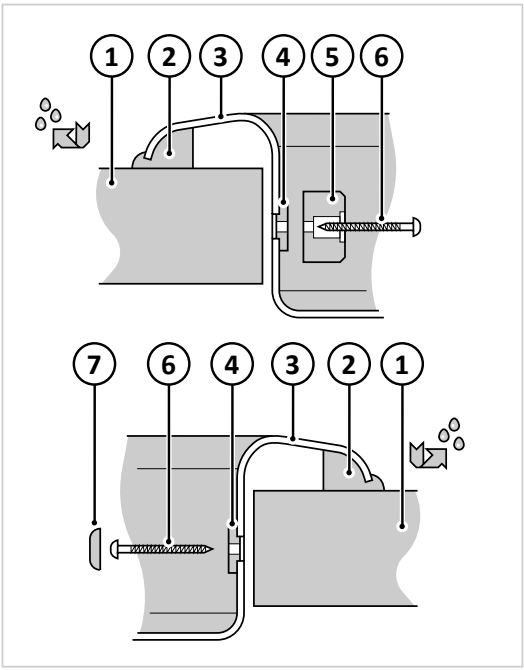

1. Worktop
2. Seal
3. Sink pressing
4. Nylon washer
5. Glass lid bump stop
6. No.6 wood screw
7. Nylon cap

SBL10

There are 3 fixing positions, 1 on either side of the bowl towards the rear and one at the front which also serves as the glass lid stop.

SSK10

There are 4 fixing positions, 2 on either side of the sink.

- Apply pressure to the base of the bowl and drill the pilot holes (1 for each fixing position) with a 2.5mm drill.

SBL10/SSK10: Slightly angle the drill down so that when the screw is applied, it pulls the bowl down to the worktop. Do not angle the drill by more than approximately 10º, or the screw will apply uneven pressure around the fixing hole, which could result in damage.

- Secure the washer(s) (4) and the glass lid bump stop (5) at the front fixing position(s) with 25mm wood screw(s) (6), by driving the screws partially in.

- Secure the washers (4) at the rear fixing positions with 15mm wood screws (6), by driving the screws partially in.
- Apply pressure to the base of the bowl/sink to fix the screws.

  SBL10:

  - Apply pressure to the base of the bowl towards the rear and fix the two rear fixing screws at either side of the bowl.
  - Apply pressure to the base of the bowl towards the front and fix the front fixing screw with the glass lid bump stop.

  SSK10

  - Apply pressure to the base of the sink and secure the front and rear fixing screw of the sink side.
  - Apply pressure to the drainer side and secure the front and rear fixing screw of the drainer side.
- Clip the 2 grey nylon caps (7) over the rear fixing screws.

SBL10 only: Attach the rack bracket to the lid with sealant as shown.

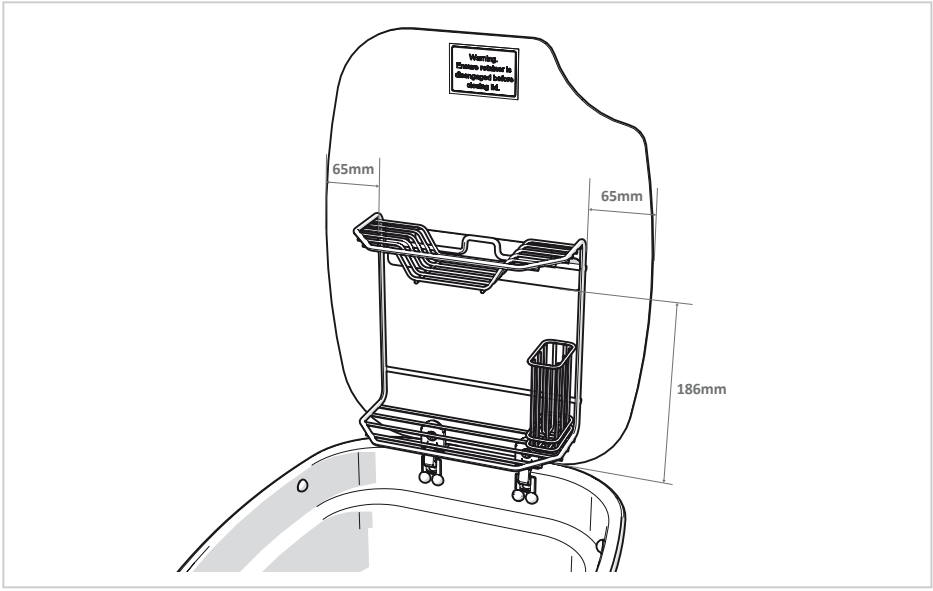

The curing time and the required pressure depend on the type of sealant. Always follow the instructions of the bonding manufacturer.

Thetford recommends using a clear silicone sealant.

SBL17 series

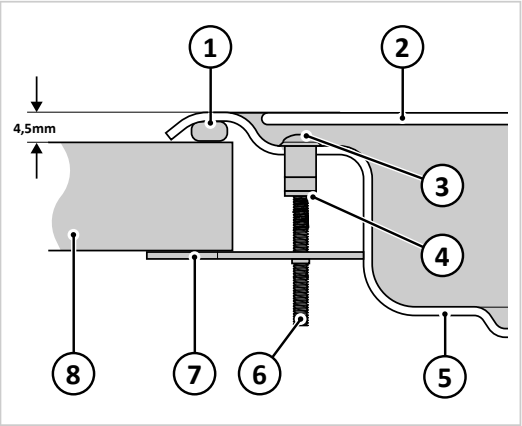

1. Optional seal
2. Glass lid
3. Glass lid bump stop
4. Rivet nut
5. Bowl/sink
6. Clamping screw
7. Clamping bracket
8. Worktop

- Place the rivet nuts (4) and clamping screws (6) through the screw position holes.
- Ensure the clamping screws remains vertical and fit the clamping brackets (7) underneath the worktop.
- Tighten the 4 clamping screws (6) until the bowl/sink is firmly fixed to the worktop (8) and the rubber seal (1) is compressed sufficiently to prevent the ingress of water.

Recommended torque of 1Nm.

- Place the 4 glass lid bump stops (3) into the rivet nuts (4).

SBL22 series

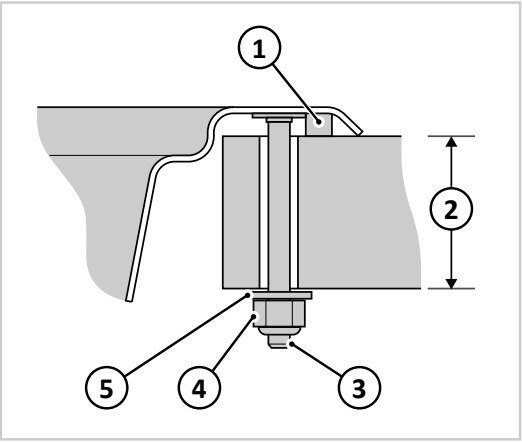

1. Self-adhesive foam seal
2. 15-30mm worktop
3. Fixing screw
4. Self-locking nut
5. Steel washer

The bowl is supplied with 4mm fixing screws (3) attached and equally spaced around the rim of the bowl. A self-adhesive foam seal (1), which prevents water penetration, is already attached.

- Place a steel washer (5) and self-locking nut (4) onto each fixing screw (3).

- Tighten each nut with a 7mm spanner to clamp the bowl to the worktop.

SBL23 series

The SBL23 series has 3 different fixing systems to secure the appliance.

For fixing systems 2 and 3, the 4 Ø6mm holes and corresponding 426mm distances are not required.

For fixing system 3, the bowl is fitted with 4 Ø3.5mm x 25mm screws.

Fixing system 1

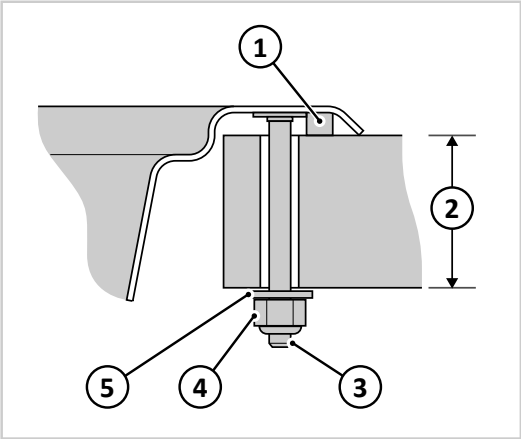

1. Self-adhesive foam seal
2. 15-30mm worktop
3. Fixing screw
4. Self-locking nut
5. Steel washer

The bowl is supplied with 4mm fixing screws (3) attached and equally spaced around the rim of the bowl. A self-adhesive foam seal (1), which prevents water penetration, is already attached.

- Place a steel washer (5) and self-locking nut (4) onto each fixing screw (3).
- Tighten each nut with a 7mm spanner to clamp the bowl to the worktop.

Fixing system 2

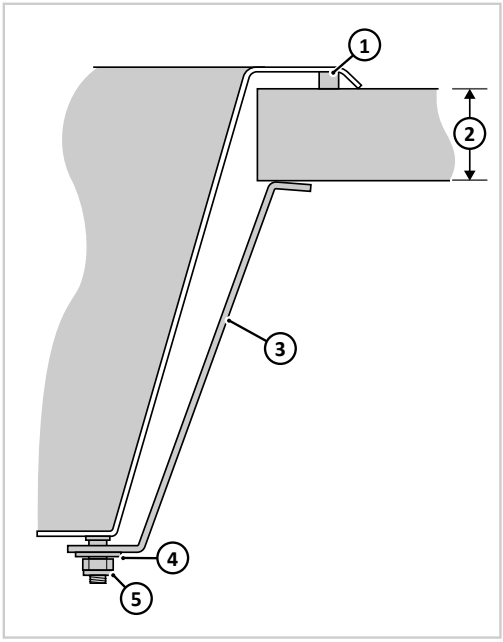

1. Self-adhesive foam seal
2. 15-30mm worktop
3. Clamping bracket
4. Washer
5. Self-locking nut

The bowl is supplied with under-bowl fixings, equally spaced around the base of the bowl. A self-adhesive foam seal (1), which prevents water penetration, is already attached.

- Place a clamping bracket (3) and washer (4) onto each screw.
- Keep the clamping bracket and washer in place with a self-locking nut (5).
- Check if each clamping bracket is placed correctly against the worktop.
- Tighten each nut to clamp the bowl to the worktop.

Fixing system 3

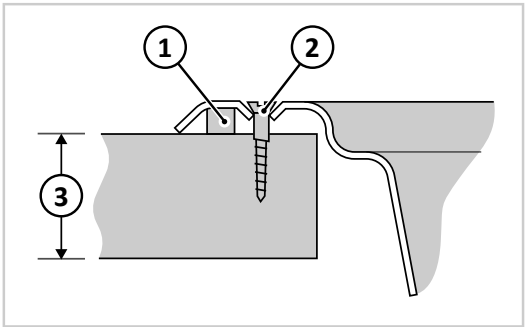

1. Self-adhesive foam seal
2. Fixing screw
3. 15-30mm worktop

There are 4 fixing holes equally spaced around the rim of the bowl. A self-adhesive foam seal (1), which prevents water penetration, is already attached.

- Use the fixing screws (2) to secure the bowl to the worktop.

SBL30 series

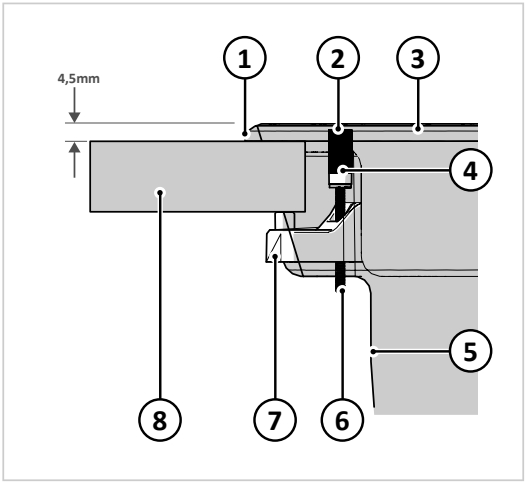

1. Seal
2. Glass lid bump stop
3. Glass lid
4. Clamping bush
5. Bowl
6. Clamping screw
7. Clamping arm
8. Worktop

- Remove the 4 glass lid bump stops (2), that are fitted into clamping bushes (4), to gain access to the clamping screws (6).
- Open the glass lid (3).
- Ensure that the 4 clamping arms (7) are rotated against the side of the bowl (5).
- Tighten the 4 clamping screws until the bowl is firmly fixed to the worktop (8) and the seal is compressed sufficiently to prevent the ingress of water.

  Recommended torque of 1Nm.

- Place the 4 glass lid bump stops (2) back into the clamping bushes (4).

SBL33/SBL34 series

Surface mount

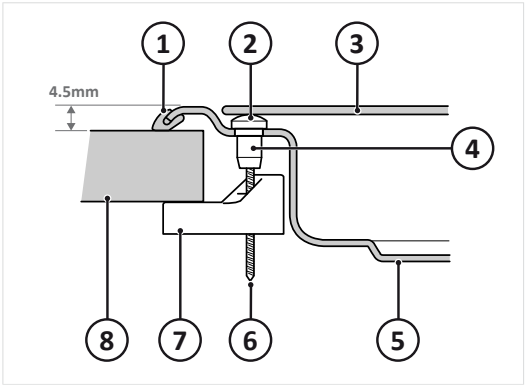

1. Seal
2. Glass lid bump stop
3. Glass lid
4. Clamping bush
5. Bowl
6. Clamping screw
7. Clamping arm
8. Worktop

Flush mount

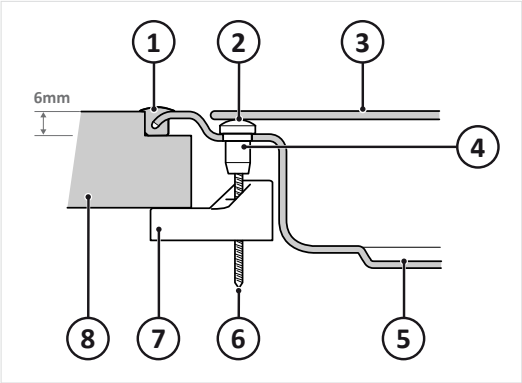

1. Seal
2. Glass lid bump stop
3. Glass lid
4. Clamping bush
5. Bowl
6. Clamping screw
7. Clamping arm
8. Worktop

- Remove the 4 glass lid bump stops (2), that are fitted into clamping bushes (4), to gain access to the clamping screws (6).
- Open the glass lid (3).
- Ensure that the 4 clamping arms (7) are rotated against the side of the bowl (5).
- Tighten the 4 clamping screws until the bowl is firmly fixed to the worktop (8) and the seal is compressed sufficiently to prevent the ingress of water.

  Recommended torque of 1Nm.

- Place the 4 glass lid bump stops (2) back into the clamping bushes (4).

7. After installation

Visual checks

Check if:

- All package material has been removed and disposed of appropriately.

Functional checks

Check if:

- The rubber seal is compressed sufficiently to prevent the ingress of water.
- For models with lid: check if the lid stays open and functions correctly.

8. Service & questions

Service

All servicing must be carried out by a competent person.

Questions

If you have questions about your product, parts, accessories or authorised services visit www.thetford.com.

If you contact an authorised local Service Centre in your country, provide the details of the model and serial number plus the date of purchase.

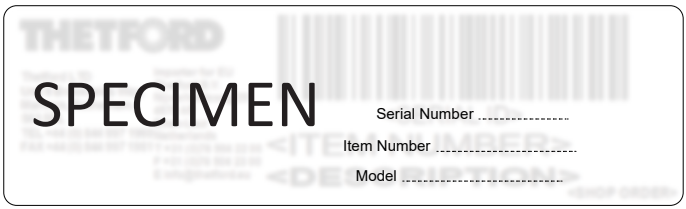

Warranty

For our warranty clause, please refer to the conditions mentioned on www.thetford.com.

EUROPEAN HEADQUARTERS
Thetford B.V.
P.O. Box 169
4870 AD Etten-Leur
The Netherlands

T +31 76 504 22 00
F +31 76 504 23 00
E info@thetford.eu

UNITED KINGDOM
Thetford Ltd.
Unit 6
Brookfields Way
Manvers, Rotherham
S63 5DL, England
United Kingdom

T +44 844 997 1960
F +44 844 997 1961
E infogb@thetford.eu

GERMANY
Thetford GmbH
Schallbruch 14
D-42781 Haan
Deutschland

T +49 2129 94250
F +49 2129 942525
E infod@thetford.eu

FRANCE
Thetford S.A.R.L.
Parc BUROPLUS / Bâtiment 6
18, Boulevard de la Paix
CS 80008
95895 Cergy Pontoise Cedex
France

T +33 1 30 37 58 23
F not available
E infof@thetford.eu

ITALY
Thetford Italy c/o Tecma s.r.l.
Via Flaminia
Loc. Castel delle Formiche
05030 Otricoli (TR)
Italia

T +39 0744 709071
F +39 0744 719833
E infoi@thetford.eu

SPAIN AND PORTUGAL
Mercè Grau Solà
Agente para España y Portugal
C/ Castellet, 36 bxs 2a
08800-Vilanova i la Geltrú
Barcelona
España

T +34 938 154 389
F not available
E infosp@thetford.eu

SCANDINAVIA
Thetford Scandinavia
Bangatan 6
521 43 Falköping
Sverige

T +46 31 336 35 80
F not available
E infos@thetford.eu

AUSTRALIA
Thetford Australia Pty. Ltd.
130-132 Freight Drive
Somerton VIC 3062
Australia

T +61 3 9358 0700
F not available
E infoaus@thetford.com.au
www.thetford.com.au

CHINA
Thetford China
Rm. 1207, Coastal Building
(East Block)
Haide 3rd Road, Nanshan District
Shenzen, 518054
China

T +86 755 8627 1393
F +86 755 8627 1673
E info@thetford.cn
www.thetford.cn

www.thetford.com

Copyright 2020-2024 Thetford B.V. All rights reserved.
SINS2150/0624-V03