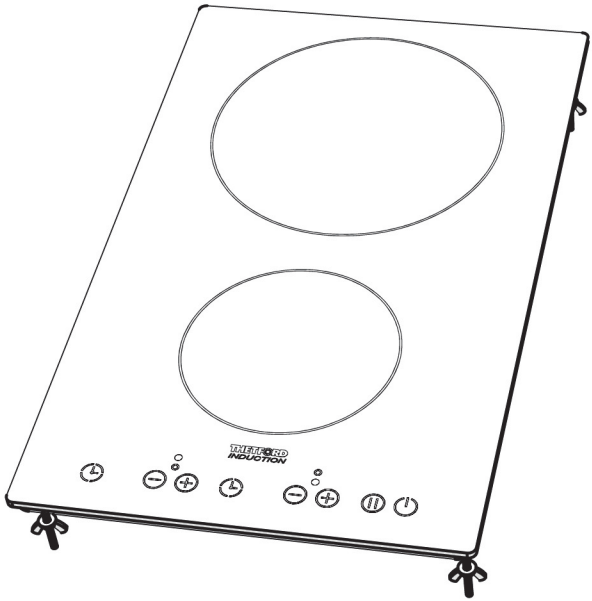

Hob
902 Series

Installation Manual

SINS2104/0219-V03

THETFORD

DECLARATION OF CONFORMITY

We: **THETFORD Ltd**

Address: Unit 6 Brookfields Way, Manvers, Rotherham, S63 5DL
Telephone: (+44) (0) 844 997 1960. Fax: (+44) (0) 844 997 1961

Declare under our sole responsibility that;

Product Types; Domestic build-in electric induction cooking appliances.

Model Number/Description; SHB902XX Series Domino Induction Hobs.

Satisfy the essential requirements of the Low Voltage Directive 2014/35/EU and are manufactured in accordance with the harmonised European standards; EN 60335-1: 2002+A14:2010, EN 60335-2-6: 2003+A2:2008, EN 62233:2008.

Satisfy the essential requirements of the Electro Magnetic Compatibility Directive 2014/30/EU and are manufactured in accordance with the harmonised European standards: EN 55014-1: 2006 + A2:2011, EN 55014-2:2015, EN 61000-3-2: 2014; EN 61000-3-3:2013.

We also declare that the production of each specific model will be in conformity with the type as described in the EC type-examination certificate:

GB 6702 Z, Issued by Intertek

We also declare that the production of each specific model will be in conformity with the type as described in Test Report(s):

10049994, Issued by Intertek and PCL11604925 issued by Panasonic

Name	:	P. S Thomas
Title/Position	:	Director
Place & Date of Issue	:	Rotherham 19th July 2016
Signature	:	

EN

Original Installation Manual

Contents

1 Introduction 3
2 Symbols 3
3 Regulations and standards 4
4 Installation audit form 4
5 Serviceability 4
6 Position and placement 5
7 Connecting electricity 7
8 After installation 8
9 Technical specifications 8
10 Servicing 9
11 Questions / customer service 9

1. Introduction

This is the installation manual for the Thetford SHB902 series hob. The manual is meant for qualified installers who will install the hob in a caravan, camper, boat or holiday home. Read the information and instructions carefully and follow them strictly to install the hob safely and correctly.

Also read the warnings in the user manual before testing the hob after installation.

Our policy is one of continuous development and improvement. Specifications and illustrations may change subsequent to publication.

If the appliance is not installed in accordance with national and European regulations, rules and standards this will void the warranty and may lead to criminal prosecution.

2. Symbols

Key to symbols:

Warning. Risk of injury and/or damage.

Attention. Important information.

Note. Additional information.

3. Regulations and standards

Do not modify this appliance, unless the modification is authorised and carried out by the manufacturer or their agent.

Use only genuine and approved parts and materials.

Wear the correct Personal Protective Equipment during the installation. Also follow the applicable safety regulations.

Electrical appliances should only be installed by qualified and certified professionals.

Pay close attention to current regulations on ventilation in the country of use.

If it is not possible to install the appliance in accordance with these instructions, please refer to Thetford for further guidance.

For more information about ventilation regulations and requirements, see Position and placement.

4. Installation audit form

Thetford offers an additional service by auditing the installation of its products. This means that when a Thetford product is installed a Thetford local service representative will carry out a specific audit based on the Thetford installation instructions. The audit is meant as a reference for the specific model to ensure correct installation. In any case the Thetford local service representative can be contacted for any additional support related to the installation of the product.

5. Serviceability

The installer of Thetford products is responsible for proper installation to ensure the correct functionality and serviceability of the appliance. In terms of serviceability, this means that a dealer or an authorised Thetford service partner must be able to de-install and re-install the Thetford

products within the time that is allowed according to the Thetford time-list, using standard tools and equipment.

This is to claim any warranty during the period of 3 years after purchase date. The serviceability of the product is also included in the audit. In case of any queries on this subject, please contact the Thetford local service representative before installing the product.

6. Position and placement

- Install the induction hob in a worktop cut-out and fixing holes prepared as shown.

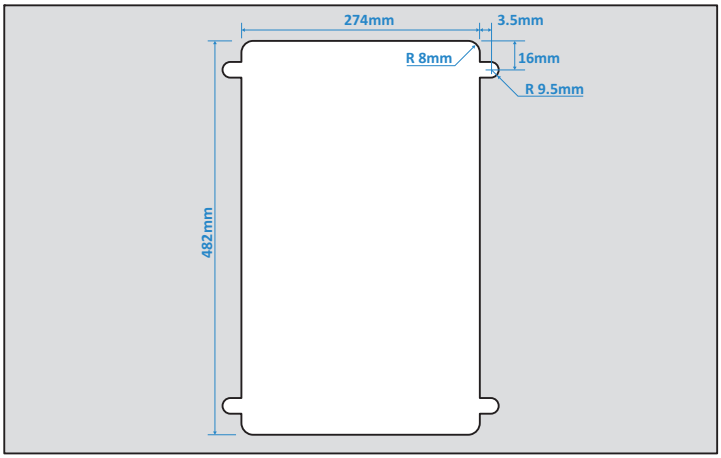

This appliance may be installed in a kitchen/kitchen diner but not in a room containing a bath or a shower.

Follow the minimum dimensions shown in this manual. Any deviation could result in excessive temperature rise. If the minimum dimensions must be reduced, due to design constraints, a temperature rise test of all furniture fitted around the appliance must be performed. Where the minimum dimensions are reduced, it is recommended to install non-combustible material.

The surrounding surfaces must be able to withstand the allowable temperature rise of 65°C above ambient temperature, as specified in the EN 60335-1 and EN 60335-2-6 standards and in accordance with the design of this unit.

All combustible materials such as curtains and shelves must be kept well clear of the appliance.

The temperature of the surrounding surfaces may rise if there are other additional devices besides the appliance. Check the allowable temperature of the materials used for the surrounding surfaces to ensure that they meet the requirements of EN 60335-1 and EN 60335-2-6.

- Maintain the minimum distances between the burners and side, rear and overhanging parts.

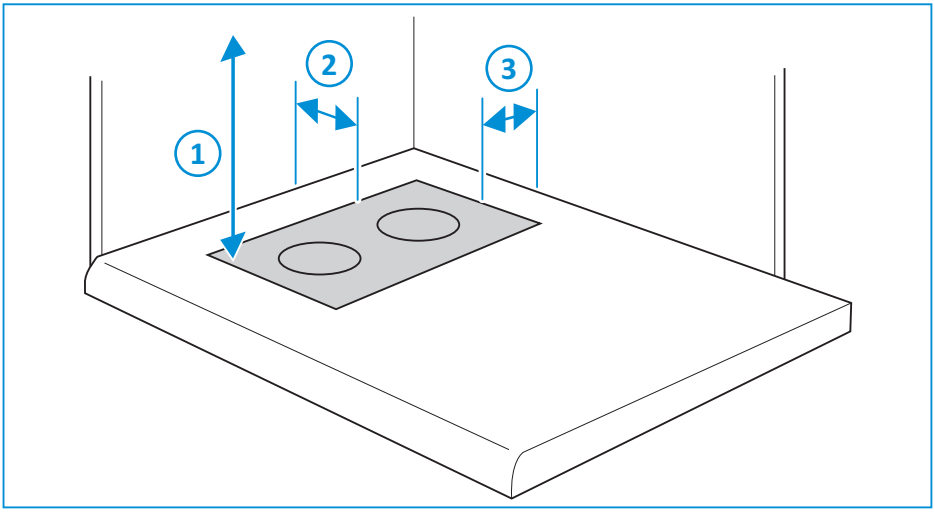

1. Distance between hob and overhanging parts: min. 500mm
2. Distance between hob and the side: min. 100mm
3. Distance between hob and the rear: min. 40mm

If you are unable to maintain these minimum distances, protect with non-flammable material.

- Provide a cool air inlet vent under the hob at the rear (A).
- Provide a cool air inlet vent in the worktop (B).
- Provide an air gap of at least 25mm under the unit (C).
- Provide a cool air outlet vent at the front of at least 10 x 300mm (D).

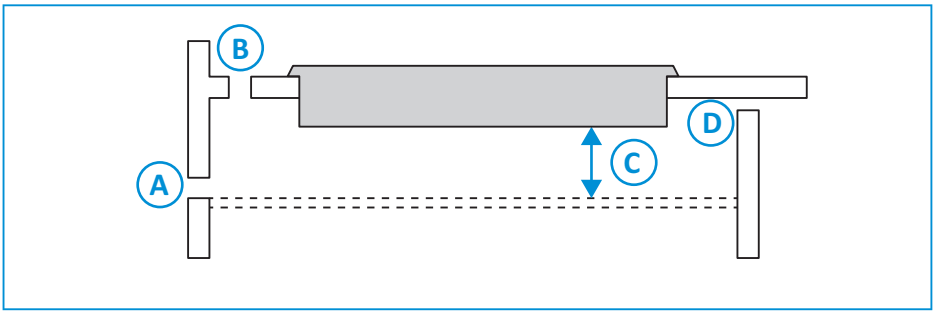

Make sure the inlet and outlet vents can never be blocked.

- Prior to positioning the hob on the worktop, attach the supplied foam seal to the underside of the appliance around its periphery.

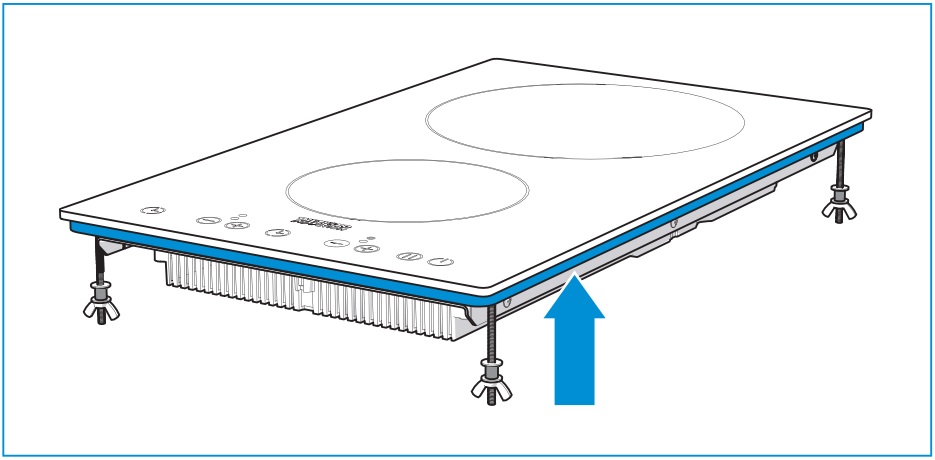

- Fix the appliance in place using 4 clamping screws along with fixings provided as per image below.

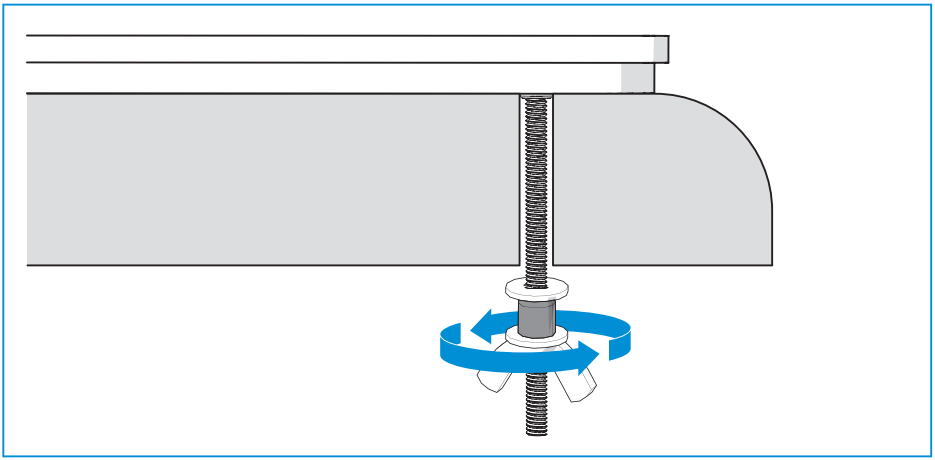

Check the position of the hob in the worktop and perimeter seal before tightening the wing nuts.

The underside of the appliance must be shielded. It is recommended the shield is manufactured from non-combustible material and located a minimum of 25mm below the lowest part of the appliance.

7. Connecting electricity

- Models fitted with power cord only: This appliance is supplied with a double insulated cord type 227 IEC 53 (H05VV-F) which has a current capacity of up to 15A. This should be connected to

a double pole switched mains supply, with 3mm minimum contact separation at all poles in accordance with the wiring rules. The switch must be readily accessible after installation.

- Australian models have a 15A plug attached to the end of the power cord for connection to a suitable 15A switched wall mounted socket. The switched electrical socket must be accessible after installation of the appliance.



This appliance must be earthed.



Ensure that all electrical cables are routed directly away and well clear of this appliance and other heat sources.



Do not allow the cord or wires to hang loose into the lower compartment.

8. After installation

- Ensure that all packaging materials have been removed.
- Refer to the warnings in the user manual and test all appliance functions in accordance with that manual.

9. Technical specifications

Table 1: Heat zone specifications

	SHB902 series	
	Heat zone 1	Heat zone 2
	kW	kW
Without power boost	1.8	1.4
With power boost	2.3	1.8
Voltage	220-240V ~ 50Hz	220-240V ~ 50Hz
P. max (excl. user interface)	2300W	
Standby	0.5W	

Table 2: Dimensions and weight

	SHB902 series		
Dimensions	H	W	D
mm	50	500	305
Appliance weight	6.0kg		

10. Servicing

All servicing must be carried out by an approved competent person. Before any service work is started, the appliance should have been left to cool and be disconnected from the electrical supply. After each service the appliance must be checked for electrical safety.

For service, please contact your authorised local Service Centre giving details of the model and serial number on the data badge plus date of purchase.

Model Name & Series Number			
G30 G31	CAT I_3+(28-30/37) BUTANE 28-30mbar PROPANE 37mbar	CAT I_3B/P(30) BUTANE 30mbar PRO[illegible]bar	THETFORD
∑Qn	Power kW (g/hr)	Model Number	Spark Ignition
CE	Pin Number	Serial Number	Voltage ~ 50 Hz
	Country Codes 1	Cou[illegible]es 2	Power kW
			QC Pass / Order No

11. Questions / customer service

- Visit www.thetford.com.
- Contact Customer Service Thetford in your country. See the addresses on the back.

EUROPEAN HEADQUARTERS
Thetford B.V.
Nijverheidsweg 29
P.O. Box 169
4870 AD Etten-Leur
The Netherlands

T +31 76 504 22 00
F +31 76 504 23 00
E info@thetford.eu

UNITED KINGDOM
Thetford Ltd.
Unit 6
Brookfields Way
Manvers, Rotherham
S63 5DL, England
United Kingdom

T +44 844 997 1960
F +44 844 997 1961
E infogb@thetford.eu

GERMANY
Thetford GmbH
Schallbruch 14
D-42781 Haan
Deutschland

T +49 2129 94250
F +49 2129 942525
E infod@thetford.eu

FRANCE
Thetford S.A.R.L.
Parc BUROPLUS / Bâtiment 6
18, Boulevard de la Paix
95800 CERGY
France

T +33 1 30 37 58 23
F +33 1 30 37 97 67
E infof@thetford.eu

ITALY
Thetford Italy c/o Tecma s.r.l.
Via Flaminia
Loc. Castel delle Formiche
05030 Otricoli (TR)
Italia

T +39 0744 709071
F +39 0744 719833
E infoi@thetford.eu

SPAIN AND PORTUGAL
Mercè Grau Solà
Agente para España y Portugal
c/ Castellet, 36 bxs 2ª
08800 Vilanova i la Geltrú
Barcelona
España

T +34 938 154 389
F not available
E infosp@thetford.eu

SCANDINAVIA
Thetford B.V.
Representative Office Scandinavia
Hantverkaregatan 32D
521 61 Stenstorp
Sverige

T +46 31 336 35 80
F +46 31 44 85 70
E infos@thetford.eu

AUSTRALIA
Thetford Australia Pty. Ltd.
41 Lara Way
Campbellfield VIC 3061
Australia

T +61 3 9358 0700
F +61 3 9357 7060
E infoau@thetford.eu
www.thetford.com.au

CHINA
Thetford China
Rm. 1207, Coastal Building
(East Block)
Haide 3rd Road, Nanshan District
Shenzen, 518054
China

T +86 755 8627 1393
F +86 755 8627 1673
E info@thetford.cn
www.thetford.cn

©Thetford 2019

www.thetford.com